IN THE UNITED STATES DISTRICT COURT
FOR THE WESTERN DISTRICT OF PENNSYLVANIA

| | |
|---|---|
| GORGE DESIGN GROUP, LLC, and<br>KIRBY ERDELY,<br><br>Plaintiffs,<br><br>v.<br><br>SYARME, CAMPMAX, FREELAND OUTDOOR, GOUMAIZILIAO, GRASSLAND-ALL, MAMAY SUMARNA, MEANING XUANSHENG, NVHUNG36, IAM_1786, SKYCORPWORLD, AIMFIREE STORE, ALEXNLD, ANONTEE, BANGGOOD, BBFAT, BERROUS, BRYCES-SHOP, CAPIONS, COOHOME, DANCEMAGIC.SHOP, INSCRIPTIONLIFE, IZYNDEAL, LILYMI, LOCASDEALS, MERCADOMAGICO, MOTIONCOMM, MYRAGRAP, NAKATHALIE, ORANGE DANCER, PROTELIKES, QUANDARN, REACHSSGF, SHOPBESTYO, SHOWCASESF, TODDEALS, TSMALLS, URBAN & HAWK, WATERBESTS, and WEREBEAR,<br><br>Defendants. | Civil Action No.<br><br>**FILED UNDER SEAL** |

**COMPLAINT FOR DAMAGES AND INJUNCTIVE RELIEF**

Gorge Design Group, LLC ("Gorge Design"), a Washington corporation, and Kirby Edely ("Erdely"), an individual (collectively, Gorge Design and Erdely are hereinafter referred to as "Plaintiffs"), hereby sue Defendants, the Individuals, Partnerships, and Unincorporated Associations identified in the Caption and which are set forth in **Schedule "A"** hereto (collectively "Defendants"). Defendants have offered for sale, sold, and distributed knock-off and infringing versions of Plaintiffs' Ultimate Ground Anchor ground anchor product which

closely mimic the appearance of Plaintiffs' genuine product within this district and throughout the United States by operating e-commerce stores established at least via amazon.com, ebay.com, aliexpress.com, and, shopify.com ("Third Party Service Providers"), Internet marketplace using their respective Store Names, Domain Names, and Seller Names set forth on **Schedule "A"** hereto (collectively, the "Seller IDs")("Infringing Product(s)). As set forth below, Defendants are promoting, selling, offering for sale and distributing their Infringing Products, thus (i) unfairly competing by using Plaintiffs' photographs, videos, artwork, creative text and product instructions while marketing their knock-off products in a willful attempt to pass off their knock-off products as genuine versions of Plaintiffs' Products; and/or (ii) infringing at least one of the claims of Plaintiffs' registered U.S. Patent. In support of their claims, Plaintiffs allege as follows:

## NATURE OF THE ACTION

1.In 2005, David J. Brown, invented the Orange Screw ground anchor (the "Ultimate Ground Anchor") and Kirby Erdely, David J. Brown's son-in-law, is the owner of the patent related thereto; Gorge Design Group, LLC and Kirby Erdely are the owners of all the intellectual property related thereto. They are a family-owned business and the named Plaintiffs in this lawsuit.

2.Erdely developed his father-in law's invention and brought it to market, and now, with Gorge Design, sell the unique and revolutionary product under the common law trademark Ultimate Ground Anchor ("Plaintiffs' Mark") that is the most effective ground anchor ever made ("Plaintiffs' Product"). The Plaintiffs' Product is made of 100% recycled materials and manufactured in the U.S.A. The Plaintiffs' Product will secure pets; anchor RV awnings; hold

tarps over boats, ATVs and firewood; as well as ensure tents and sunshades stay put. Plaintiffs identified the need for this product and created the market for this product.

3.By August of 2015, a crowdfunding campaign was launched on kickstarter.com. In less than one month, the campaign was fully funded and at the end of the campaign, it was 214% funded from 641 backers in nearly 20 countries. The current version of Plaintiffs' Product is sold through the orangescrew.com website, and the amazon.com and eBay Internet marketplaces by Gorge Design Group, LLC d/b/a Orange Screw; and various retail stores across the United States.

4.Defendants' sale, distribution, and advertising of the Infringing Product are highly likely to cause consumers to believe that Defendants are offering genuine versions of Plaintiffs' Products when in fact they are not. To illustrate, below are several examples which vividly show that the Infringing Product itself and the manner in which it is marketed is designed to confuse and mislead consumers into believing that they are purchasing Plaintiffs' Product or that the Infringing Product is otherwise approved by or sourced from Plaintiffs:

| Plaintiff's Product | Defendant Grassland All Listing |
| --- | --- |
| 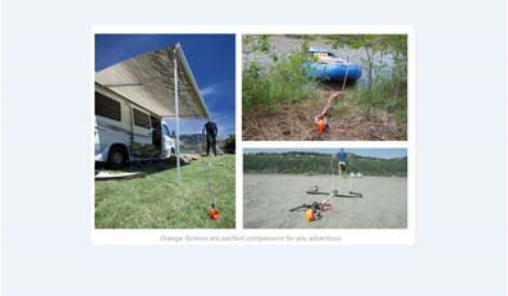 | |

| | |
|---|---|
| Plaintiff's Product | Defendant Iam_1786 Listing |
| Plaintiff's Product | Defendant goumaiZILIAO Listing |

5.Defendants' actions have resulted in actual confusion in the marketplace between Defendants' Infringing Product and the genuine version of Plaintiffs' Products. Numerous purchasers of Defendants' Infringing Product have contacted Plaintiffs to complain about the performance of the Infringing Product believing same to be a genuine product. Examples of such complaints include "Thought I was ordering from you and I have been orange screwed." Such complaints and negative comments are likely not just made directly to Plaintiffs, but are also posted by buyers of the Infringing Products on various websites and social media sites for all the world to see.

6.Defendants' Infringing Products are substantially inferior to the genuine product. As poorly designed and manufactured products, Defendants' Infringing Products create serious risk of harm to animals that may break or pull out the inferior ground stake and run away from their intended safe ground. Likewise, the inferior products may fail allowing expensive items such as canoes, kayaks, and the like to escape safe mooring and be damaged or lost. Finally, the failure of the inferior ground stake may result in tents or tarps coming undone thus exposing users or items to sun or inclement weather, and the damage caused by such. The Infringing Products threaten to destroy the reputation of high quality that Plaintiffs' Products have earned.

7.Plaintiffs are the owners of various published photographs, videos, artwork, creative text and product instructions appearing on kickstarter.com and orangescrew.com. (Plaintiffs' Works), which are shown in Complaint **Exhibit 1 and 2**. Additionally, Plaintiffs have taken numerous steps to protect Plaintiffs' Product. For instance, Plaintiff Kirby Erdely is the owner of U.S. Patent No. 7309198 for "Re-useable threaded tie downs" ("Plaintiffs' Patent") (describing Plaintiffs' Product and its use). A copy of the assignment record and the issued patent is attached as Complaint **Exhibit 3**.

8.On information and belief, Defendants' sale of Infringing Products gives rise to a plausible expectation that discovery will reveal that Defendants' actions all arise from the same transaction, occurrence, or series of transactions. Specifically, on information and belief, Defendants are actively participating in a conspiracy to distribute and sell Infringing Products. For example, Defendants, on information and belief, are working together to manufacture, arrange the manufacture of and/or sell and otherwise distribute the Infringing Products. Moreover, the Infringing Products share similar characteristics including, for example, colors, shapes, and sizes.

9. Plaintiffs therefore bring this action for federal unfair competition in violation of Section 43(a) of the Trademark Act of 1946, as amended; patent infringement; common law unfair competition; common law trademark infringement, pursuant to 15 U.S.C. § 1125(a), 35 U.S.C. § 271 and The All Writs Act, 28 U.S.C. § 1651(a).

## JURISDICTION AND VENUE

10. This Court has subject matter jurisdiction over this action pursuant to 15 U.S.C. § 1121 and 28 U.S.C. §§ 1331, 1332, and 1338. This Court has supplemental jurisdiction pursuant to 28 U.S.C. § 1367 over Plaintiffs' state law claims because those claims are so related to the federal claims that they form part of the same case or controversy.

11. This Court may exercise personal jurisdiction over a non-resident of the State in which the Court sits to the extent authorized by the state's laws. Fed. R. Civ. P. 4(e). Pennsylvania authorizes personal jurisdiction over each Defendant pursuant to 42 Pa. Cons. Stat. § 5322 (a) which provides in pertinent part: "A tribunal of this Commonwealth may exercise personal jurisdiction over a person ... as to a cause of action or other matter arising from such person: (1) Transacting any business in this Commonwealth. Without excluding other acts which may constitute transacting business for the purpose of this paragraph: (ii) The doing of a single act in this Commonwealth for the purpose of thereby realizing pecuniary benefit ... (3) Causing harm or tortious injury by an act or omission in this Commonwealth. (4) Causing harm or tortious injury by an act or omission outside this Commonwealth ... (10) Committing any violation within the jurisdiction of the Commonwealth of any statute, home rule charter, local ordinance or resolution, or rule or regulation promulgated thereunder by any government unit or of any order of court or other government unit." In the alternative, Federal Rule of Civil Procedure 4(k) confers personal jurisdiction over the Defendants because, upon information and

belief, Defendants regularly conduct, transact and/or solicit business in Pennsylvania and in this judicial district, and/or derive substantial revenue from their business transactions in Pennsylvania and in this judicial district and/or otherwise avail themselves of the privileges and protections of the laws of the Commonwealth of Pennsylvania such that this Court's assertion of jurisdiction over Defendants does not offend traditional notions of fair play and due process, and/or Defendants' illegal counterfeiting and infringing actions caused injury to Plaintiffs in Pennsylvania and in this judicial district such that Defendants should reasonably expect such actions to have consequences in Pennsylvania and in this judicial district, for example:

a. Upon information and belief, at all times relevant hereto, Defendants were and/or are systematically directing and/or targeting their business activities at consumers in the United States, including Pennsylvania, through on-line platforms with Merchant Storefronts (as defined *infra*), via on-line marketplace websites, under the Seller IDs, as well as any and all as yet undiscovered accounts with Merchant Storefronts held by or associated with Defendants, their respective officers, employees, agents, servants and all persons in active concert or participation with any of them ("User Accounts"), through which consumers in the United States, including Pennsylvania, can view the one or more of Defendants' Merchant Storefronts that each Defendant operates, uses to communicate with Defendants regarding their listings for Infringing Products and to place orders for, receive invoices for and purchase Infringing Products for delivery in the U.S., including Pennsylvania, as a means for establishing regular business with the U.S., including Pennsylvania.

b. Upon information and belief, certain Defendants are sophisticated sellers, each operating one or more commercial businesses using their respective User Accounts

through which Defendants, their respective officers, employees, agents, servants and all persons in active concert of participation with any of them, operate storefronts to manufacture, import, export, advertise, market, promote, distribute, offer for sale and/or otherwise deal in products, including the Infringing Products, which are held by or associated with Defendants, their respective officers, employees, agents, servants and all persons in active concert or participation with any of them ("Merchant Storefront(s)") in wholesale quantities at significantly below-market prices to consumers worldwide, including to those in the U.S., and specifically Pennsylvania.

c. Upon information and belief, Defendants' Merchant Storefronts reflect multiple sales to consumers all over the world, including repeat sales to consumers in the U.S. and into this judicial district.

d. Upon information and belief, all Defendants accept payment in U.S. Dollars and offer shipping to the U.S., including to Pennsylvania.

e. Upon information and belief, at all times relevant, Defendants have transacted business with consumers located in the U.S., including Pennsylvania, for the sale and shipment Infringing Products.

f. Upon information and belief, Defendants are employing and benefiting from substantially similar, paid advertising and marketing and advertising strategies in order to make their Merchant Storefronts selling illegal goods appear more relevant and attractive to search result software across an array of search words, including but not limited to "ULTIMATE GROUND ANCHOR". By their actions, Defendants are causing concurrent and indivisible harm to Plaintiffs and the consuming public by (i) depriving Plaintiffs of their right to fairly compete for space within the various on-line marketplace

search results and reducing the visibility of the Plaintiffs' genuine Ultimate Ground Anchor on various on-line marketplaces and/or diluting and driving down the retail market price for the (ii) causing an overall degradation of the value of the goodwill associated with Plaintiffs' marks and goods; and (iii) increasing Plaintiffs' overall cost to market its goods and educate consumers about its brand and products.

g. Upon information and belief, Defendants have cooperated, communicated their plans with one another, shared information, and coordinated their efforts, all in order to create an illegal marketplace operating in parallel to the legitimate marketplace of Plaintiffs' and the legally authorized resellers of Plaintiffs' genuine goods.

h. Upon information and belief, Defendants are concurrently targeting their counterfeiting and infringing activities toward consumers and causing harm in Allegheny County, Pennsylvania.

i. Upon information and belief, Defendants likely reside and/or operate in foreign jurisdictions with lax trademark and patent enforcement systems and are cooperating by creating an illegal stream of infringing and counterfeit goods.

j. Upon information and belief, Defendants are aware of Plaintiffs' Product, and are aware that their illegal infringing actions alleged herein are likely to cause injury to Plaintiffs in the United States, in Pennsylvania and in this judicial district specifically, as Plaintiffs conducts substantial business in Pennsylvania.

k. Plaintiffs are suffering irreparable and indivisible injury and suffered substantial damages as a result of Defendants' unauthorized and wrongful sale of counterfeit and infringing goods.

12. Venue is proper, *inter alia*, pursuant to 28 U.S.C. § 1391 and 28 U.S.C. §§ 1400(a) and (b) because, for example:

a. Upon information and belief, Defendants conduct, transact, and/or solicit business in this judicial district.

b. Upon information and belief, Defendants or their agent(s) may be found in this district because personal jurisdiction is proper in this district.

c. Upon information and belief, this is a judicial district in which a substantial part of the events or omissions giving rise to the infringement claims occurred, or a substantial part of the property that is the subject of the action is situated.

d. Defendants not resident in the United States may be sued in this judicial district because personal jurisdiction is proper in this district.

## THE PLAINTIFFS

13. Gorge Design Group, LLC ("Gorge Design") is a limited liability company organized and existing under the laws of the State of Washington, having its principal place of business at 205 West Humboldt Street, Bingen, Washington, 98605. Kirby Erdely is an individual who resides in the state of Washington and has a mailing address of 675 Ne Vine Street, White Salmon, Washington, 98672-8750. Erdely is the founder of and a governor for Gorge Design, and the owner of the intellectual property relating thereto.

14. The recent explosion of counterfeiting and infringement over the Internet, including through online marketplace platforms, has created an environment that requires brand owners, such as Plaintiffs, to expend significant time and money across a wide spectrum of efforts in

order to protect both consumers and Plaintiffs from the ill effects of confusion and the erosion of the goodwill associated with Plaintiffs' brand.

## THE DEFENDANTS

15. The Defendants are individuals and/or business entities of unknown makeup, each of whom, upon information and belief, either reside or operate in foreign jurisdictions, or redistribute products from the same or similar sources in those locations. Defendants have the capacity to be sued pursuant to Federal Rule of Civil Procedure 17(b). Defendants target their business activities toward consumers throughout the United States, including within this district, and conduct pervasive business through the operation of, at least, one fully interactive commercial Internet based e-commerce store via, at least, the Internet based online marketplaces wish.com, aliexpress.com, and eBay.com under the Seller IDs.

16. Upon information and belief, the Defendants use aliases in conjunction with the operation of their businesses as set forth in **Schedule "A"** hereto.

16. Defendants are the past and present controlling forces behind the sale of products bearing and/or using infringements of Plaintiffs' photographs, common law trademark, and patent as described herein using at least the Seller IDs.

17. Upon information and belief, Defendants directly engage in unfair competition with Plaintiffs and their authorized resellers by advertising, offering for sale and selling goods bearing and/or using infringements of Plaintiffs' patent, common law trademark, and photographs to consumers within the United States and this district through several fully interactive, commercial Internet websites and Internet based e-commerce stores operating under, at least, the storefronts, the Seller IDs, and any additional domain names, websites and corresponding website URLs or

seller identifications and store URL aliases not yet known to Plaintiffs. Defendants have purposefully directed some portion of their illegal activities towards consumers in the Commonwealth of Pennsylvania through the advertisement, offer to sell, sale, and/or shipment of Infringing Products into the Commonwealth.

18. Defendants have registered, established or purchased, and maintained the on-line marketplace website storefronts and Seller IDs. Upon information and belief, Defendants have engaged in fraudulent conduct with respect to the registration of the storefronts and Seller IDs by providing false and/or misleading information to the Internet based e-commerce platforms where they offer for sale and/or sell, during the registration or maintenance process related to their respective Seller ID. Upon information and belief, Defendants have anonymously registered and maintained some of the Seller IDs for the sole purpose of engaging in illegal infringing activities.

19. Upon information and belief, Defendants will continue to register or acquire new seller identification aliases for the purpose of selling and offering for sale goods bearing and/or using confusingly similar imitations of Plaintiffs' trade dress and trademark and infringing Plaintiffs' federally registered copyright unless preliminarily and permanently enjoined.

20. Defendants' Internet-based businesses amount to nothing more than illegal operations established and operated in order to infringe the intellectual property rights of Plaintiffs.

21. Defendants' business names, i.e., the Seller IDs, associated payment accounts, and any other alias seller identification names used in connection with the sale of infringing goods bearing and/or using Plaintiffs' respective trade dress, trademark, and images are essential components of Defendants' online activities and are the means by which Defendants further their infringement scheme and cause harm to Plaintiffs. Moreover, Defendants are using Plaintiffs'

trademark to drive Internet consumer traffic to their e-commerce stores operating under the Seller IDs, thereby creating and increasing the value of the Seller IDs and decreasing the size and value of Plaintiffs' legitimate consumer marketplace at Plaintiffs' expense.

## COMMON FACTUAL ALLEGATIONS

**Plaintiffs and Their Ultimate Ground Anchor**

22.In 2005, David J. Brown, invented the Orange Screw ground anchor (the "Ultimate Ground Anchor") and Kirby Erdely, David J. Brown's son-in-law, is the owner of the patent related thereto; together, Gorge Design Group, LLC and Kirby Erdely own all the intellectual property related thereto. They are a family-owned business and the named Plaintiffs in this lawsuit

23.Erdely brought his father-in law's invention to market, and now, with Gorge Design, sell the unique and revolutionary product under the common law trademark ULTIMATE GROUND ANCHOR ("Plaintiffs' Mark") that is the most effective ground anchor ever made ("Plaintiffs' Product"). The Plaintiffs' Product is made of 100% recycled materials and manufactured in the U.S.A. The Plaintiffs' Product will secure pets; anchor RV awnings; hold tarps over boats, ATVs and firewood; as well as ensure tents and sunshades stay put. Kirby Erdely identified the need for this product and created the market for this product.

24.Genuine goods bearing the Plaintiffs' Mark are widely legitimately advertised and promoted by Plaintiffs, their authorized distributors, and unrelated third parties via the Internet. Over the past several years, visibility on the Internet, particularly via Internet search engines such as Google, Yahoo!, and Bing has become increasing important to Plaintiffs' overall marketing. Thus, Plaintiffs and their authorized distributors expend significant monetary

resources on Internet marketing, including search engine optimization ("SEO") strategies. Those strategies allow Plaintiffs and their authorized retailers to fairly and legitimately educate consumers about the value associated with Plaintiffs' brand and the goods sold thereunder. Similarly, Defendants' individual seller stores are indexed on search engines and compete directly with Plaintiffs for space in the search results.

**Defendants' Wrongful and Infringing Conduct**

25. Upon information and belief, Defendants are, through at least the Internet based e-commerce stores operating under the Seller IDs, promoting, selling, offering for sale and distributing goods bearing and/or using confusingly similar imitations of Plaintiffs' Mark, using Plaintiffs' Works while marketing Infringing Products in a willful attempt to pass off their knock-off products as genuine versions of Plaintiffs Products; and infringed upon Plaintiffs' patent.

26. Upon information and belief, Defendants' Infringing Products are of a quality substantially and materially different than that of Plaintiffs' genuine goods. Defendants, upon information and belief, are actively using, promoting and otherwise advertising, distributing, selling, and/or offering for sale substantial quantities of their Infringing Products with the knowledge and intent that such goods will be mistaken for the genuine high quality goods offered for sale by Plaintiffs despite Defendants' knowledge that they are without authority to use the Plaintiffs' Mark, Plaintiffs' Works and Plaintiff's Patent. The net effect of Defendants' actions will cause confusion of consumers, at the time of initial interest, sale, and in the post-sale setting, who will believe Defendants' Infringing Products are genuine goods originating from, associated with, and approved by Plaintiffs.

27. Defendants advertise their Infringing Products for sale to the consuming public via Internet based e-commerce stores on, at least, one Internet marketplace using at least the Seller IDs. In so advertising these goods, Defendants improperly and unlawfully use the Plaintiffs' Mark, Plaintiffs' Works, and/or the Plaintiffs' Patent without Plaintiffs' permission.

28. As part of their overall infringement and counterfeiting scheme, Defendants are, upon information and belief, concurrently employing and benefitting from substantially similar, advertising and marketing strategies based, in large measure, upon an illegal use of infringements of the Plaintiffs' Mark, Plaintiffs' Works, and Plaintiffs' Patent. Specifically, Defendants are using infringements of Plaintiffs' rights in order to make their e-commerce stores selling illegal goods appear more relevant and attractive to consumers online. By their actions, Defendants are contributing to the creation and maintenance of an illegal marketplace operating in parallel to the legitimate marketplace for Plaintiffs' genuine goods. Defendants are causing, individual, concurrent and indivisible harm to Plaintiffs and the consuming public by (i) depriving Plaintiffs and other third parties of their right to fairly compete for space within search engine results and reducing the visibility of Plaintiffs' genuine goods on the World Wide Web, (ii) causing an overall degradation of the value of the goodwill associated with the Plaintiffs' rights, and (iii) increasing Plaintiffs' overall cost to market its goods and educate consumers about its brand via the Internet.

29. Upon information and belief, Defendants are concurrently targeting their infringing activities toward consumers and causing harm within this district and elsewhere throughout the United States. As a result, Defendants are defrauding Plaintiffs and the consuming public for Defendants' own benefit.

30. Plaintiffs confirmed that Defendants were and/or are still currently offering for sale and/or selling Infringing Products for sale to the consuming public via Internet based e-commerce stores on, at least, one Internet marketplace using at least the Seller IDs and that Defendants provide shipping and/or have actually shipped Infringing Products to customers located within this judicial district.

31. There is no question that the Infringing Products themselves and the manner in which they are marketed is designed to confuse and mislead consumers into believing that they are purchasing Plaintiffs' Product or that the Infringing Products are otherwise approved by or sourced from Plaintiffs, thereby trading on the goodwill and reputation of Plaintiffs by engaging in the unauthorized use of at least one of the Plaintiffs' Mark, Plaintiffs' Works, and Plaintiffs' Patent.

32. Upon information and belief, at all times relevant hereto, Defendants in this action had full knowledge of Plaintiffs' ownership of the Plaintiffs' Mark, Plaintiffs' Works, and Plaintiffs' Patent, including their exclusive right to use and license such intellectual property and the goodwill associated therewith.

33. Defendants' use of the Plaintiffs' Mark, Plaintiffs' Works, and Plaintiffs' Patent, including the promotion and advertisement, reproduction, distribution, sale, and offering for sale of their Infringing Products, is without Plaintiffs' consent or authorization.

34. Defendants are engaging in the above-described illegal infringing activities knowingly and intentionally or with reckless disregard or willful blindness to Plaintiffs' rights for the purpose of trading on Plaintiffs' goodwill and reputation. If Defendants' intentional

infringing activities are not preliminarily and permanently enjoined by this Court, Plaintiffs and the consuming public will continue to be harmed.

35. Defendants' above identified infringing activities are likely to cause confusion, deception, and mistake in the minds of consumers before, during, and after the time of purchase. Moreover, Defendants' wrongful conduct is likely to create a false impression and deceive customers, the public, and the trade into believing there is a connection or association between Plaintiffs' genuine goods and Defendants' Infringing Products, which there is not.

36. Upon information and belief, Defendants' payment and financial accounts are being used by Defendants to accept, receive, and deposit profits from Defendants' infringing and unfairly competitive activities connected to their Seller IDs and any other alias e-commerce stores, photo albums, seller identification names, domain names, or websites being used and/or controlled by them.

37. Further, upon information and belief, Defendants are likely to transfer or secret their assets to avoid payment of any monetary judgment awarded to Plaintiffs.

38. Plaintiffs have no adequate remedy at law.

39. Plaintiffs are suffering irreparable injury and have suffered substantial damages as a result of Defendants' unauthorized and wrongful use of the Plaintiffs' Mark, Plaintiffs' Works, and Plaintiffs' Patent. If Defendants' infringing and unfairly competitive activities are not preliminarily and permanently enjoined by this Court, Plaintiffs and the consuming public will continue to be harmed.

40. The harm and damages sustained by Plaintiffs have been directly and proximately caused by Defendants' wrongful reproduction, use, advertisement, promotion, offers to sell, and sale of their Infringing Products.

**COUNT I – FEDERAL UNFAIR COMPETITION (15 U.S.C. § 1125(a))**

41. Plaintiffs hereby adopt and re-allege the allegations set forth in the preceding paragraphs as if set forth herein.

42. Upon information and belief, Defendants' Infringing Products bearing, offered for sale, and sold using copies of at least one of the Plaintiffs' Mark and Plaintiffs' Works have been widely advertised and offered for sale throughout the United States via at least one fully interactive Internet marketplace.

43. Defendants' Infringing Products bearing, offered for sale, and sold using copies of at least one of the Plaintiffs' Mark and Plaintiffs' Works are virtually identical in appearance to Plaintiffs' genuine goods. Defendants' Infringing Products, however, are different and likely inferior in quality. Accordingly, Defendants' activities are likely to cause confusion in the trade and among the general public as to at least the origin or sponsorship of their Infringing Products.

44. Defendants, upon information and belief, have used in connection with their advertisement, offer for sale, and sale of their Infringing Products, false designations of origin and false descriptions and representations, including words or other symbols and trade dress, which tend to falsely describe or represent such goods and have caused such goods to enter into with full knowledge of the falsity of such designations of origin and such descriptions and representations, all to Plaintiffs' detriment.

45. Defendants have authorized infringing uses of at least one of the Plaintiffs' Mark and Plaintiffs' Works in Defendants' advertisement and promotion of their Infringing Products. Defendants have misrepresented to members of the consuming public that the Infringing Products being advertised and sold by them are genuine, non-infringing goods.

46. Additionally, Defendants are using infringements of the Plaintiffs' Mark and Plaintiffs' Works in order to unfairly compete with Plaintiffs and others for space within search engine organic results, thereby jointly depriving Plaintiffs of a valuable marketing and educational tool which would otherwise be available to Plaintiffs and reducing the visibility of Plaintiffs' genuine goods on the World Wide Web.

47. Defendants' above-described actions are in violation of Section 43(a) of the Lanham Act, 15 U.S.C. § 1125(a).

48. Plaintiffs have no adequate remedy at law, and have sustained indivisible injury and damage caused by Defendants' concurrent conduct. Absent an entry of an injunction by this Court, Defendants will continue to wrongfully reap profits and Plaintiffs will continue to suffer irreparable injury to its goodwill and business reputation, as well as monetary damages.

49. Based on Defendants' wrongful conduct, Plaintiffs are entitled to injunctive relief, Plaintiffs' actual damages and Defendants' profits in an amount to be proven at trial, enhanced discretionary damages for willful infringement, and reasonable attorneys' fees and costs.

**COUNT II – PATENT INFRINGEMENT (35 U.S.C. § 271(a))**

50. Plaintiff hereby adopts and re-allege the allegations set forth in the preceding paragraphs as if set forth herein.

51. Plaintiff is the owner of U.S. Patent No. 7,309,198 B1 ("the '198 patent"), issued December 18, 2007, for "REUSABLE THREADED TIE DOWN" and which covers Plaintiffs' Product. A true and correct copy of which is attached as **Exhibit 3**.

52. Defendants have infringed and continue to infringe the '198 patent either directly or indirectly through acts of contributory infringement or inducement in violation of 35 U.S.C. § 271, by making, using, selling, importing and/or offering to sell infringing products, namely the ground anchors that are nearly identical to Plaintiffs' Product.

53. Defendants' infringement, contributory infringement and/or inducement to infringe has injured Plaintiff and it, therefore, is entitled to recover damages adequate to compensate it for such infringement, but in no event less than a reasonable royalty.

54. Defendants' infringement, contributory infringement and/or inducement to infringe has been willful and deliberate because Defendants have notice of or knew of the '198 patent and have nonetheless injured and will continue to injure Plaintiff, unless and until this Court enters an injunction, which prohibits further infringement and specifically enjoins further manufacture, use, sale, importation and/or offer for sale of products or services that come within the scope of the '198 patent.

55. Based on Defendants' wrongful conduct, Plaintiff is entitled to injunctive relief as well as monetary damages and other remedies as provided by the Patent Act, including damages that Plaintiff has sustained and will sustain as a result of Defendants' illegal and infringing actions as alleged herein, enhanced discretionary damages and reasonable attorneys' fees and costs.

## COUNT III - COMMON LAW UNFAIR COMPETITION

56. Plaintiffs hereby adopt and re-allege the allegations set forth in the preceding paragraphs as if set forth herein.

57. This is an action against Defendants based on their promotion, advertisement, distribution, sale, and/or offering for sale of goods bearing and/or using marks that are virtually identical, both visually and phonetically, to one or more of the Plaintiffs' Mark and Plaintiffs' Works in violation of Pennsylvania's common law of unfair competition.

58. Specifically, Defendants are promoting and otherwise advertising, selling, offering for sale, and distributing goods bearing and/or using infringements of one or more of the Plaintiffs' Mark and Plaintiffs' Works. Defendants are also using infringements of one or more of the Plaintiffs' Mark and Plaintiffs' Works to unfairly compete with Plaintiffs and others on Internet marketplaces, for space in search results across an array of search terms, and visibility on the World Wide Web.

59. Defendants' infringing activities are likely to cause and actually are causing confusion, mistake, and deception among members of the trade and the general consuming public as to the origin and quality of Defendants' products by their use of one or more of the Plaintiffs' Mark and Plaintiffs' Works.

60. Plaintiffs have no adequate remedy at law and are suffering irreparable injury and damages as a result of Defendants' actions.

61. As a result of Defendants' actions alleged herein, Plaintiffs are entitled to injunctive relief, an order granting Plaintiffs' damages and Defendants' profits stemming from their infringing activities, and exemplary or punitive damages for Defendants' intentional misconduct.

## COUNT V - COMMON LAW TRADEMARK INFRINGEMENT

62. Plaintiffs hereby adopt and re-allege the allegations set forth in the preceding paragraphs as if set forth herein.

63. This is an action for common law trademark infringement against Defendants based on their promotion, advertisement, offering for sale, and sale of their Infringing Products bearing and/or using at least one of the Plaintiffs' Mark. Plaintiffs are the exclusive licensee and owner of all common law rights in and to the Plaintiffs' Mark.

64. Specifically, Defendants, upon information and belief, are manufacturing, promoting and otherwise advertising, distributing, offering for sale, and selling goods bearing and/or using infringements of the Plaintiffs' Mark.

65. Defendants' infringing activities are likely to cause and actually are causing confusion, mistake and deception among members of the trade and the general consuming public as to the origin and quality of Defendants' Products bearing and/or using the Plaintiffs' Mark.

66. Plaintiffs have no adequate remedy at law and is suffering damages and irreparable injury as a result of Defendants' actions.

## PRAYER FOR RELIEF

WHEREFORE, Plaintiffs demands judgment on all Counts of this Complaint and an award of equitable relief and monetary relief against Defendants as follows:

a. Entry of temporary, preliminary and permanent injunctions pursuant to 15 U.S.C. § 1116, 35 U.S.C. § 283, and Federal Rule of Civil Procedure 65 enjoining Defendants, their agents, representatives, servants, employees, and all those acting in concert or participation therewith, from manufacturing or causing to be manufactured, importing, advertising or

promoting, distributing, selling or offering to sell their Infringing Products; from infringing, or diluting the Plaintiffs' Mark and Plaintiffs' Works; from using the Plaintiffs' Mark and Plaintiffs' Works, or any mark similar thereto, in connection with the sale of any unauthorized goods; from using any logo, trade name or trademark or trade dress that may be calculated to falsely advertise the services or goods of Defendants as being sponsored by, authorized by, endorsed by, or in any way associated with Plaintiffs; from falsely representing themselves as being connected with Plaintiffs, through sponsorship or association, or engaging in any act that is likely to falsely cause members of the trade and/or of the purchasing public to believe any goods or services of Defendants are in any way endorsed by, approved by, and/or associated with Plaintiffs; from using any reproduction, counterfeit, infringement, copy, or colorable imitation of the Plaintiffs' Mark and Plaintiffs' Works or substantially similar copy of the Plaintiffs' Works in connection with the publicity, promotion, sale, or advertising of any goods sold by Defendants; from affixing, applying, annexing or using in connection with the sale of any goods, a false description or representation, including words or other symbols tending to falsely describe or represent Defendants' goods as being those of Plaintiffs, or in any way endorsed by Plaintiffs and from offering such goods in commerce; from engaging in search engine optimization strategies using colorable imitations of the Plaintiffs' Mark and Plaintiffs' Works; from further infringement, or use of a substantially similar copy of the Plaintiffs' Works; and from otherwise unfairly competing with Plaintiffs.

c. Entry of an Order that, upon Plaintiffs' request, any Internet marketplace website operators and/or administrators that are provided with notice of the injunction, including but not limited to the online marketplaces hosted by wish.com, aliexpress.com, and eBay.com, identify any e-mail address known to be associated with Defendants' respective Seller ID, and cease

facilitating access to any or all e-commerce stores through which Defendants engage in the promotion, offering for sale, and/or sale of goods bearing and/or using counterfeits and/or infringements of the Plaintiffs' Mark and Plaintiffs' Works, and/or a substantially similar copy of the Plaintiffs' Works.

d. Entry of an Order that, upon Plaintiffs' request, any Internet marketplace website and/or Internet Registrar operators and/or administrators who are provided with notice of the injunction, including but not limited to online marketplaces hosted by amazon.com, ebay.com, aliexpress.com, and shopify.com, permanently remove any and all listings and associated images of goods bearing and/or using counterfeits and/or infringements of the Plaintiffs' Mark and Plaintiffs' Works, or substantially similar copies of the Plaintiffs' Works via the e-commerce stores operating under the Seller IDs and/or Domain Names, including any and all listings and images of goods bearing and/or using counterfeits and/or infringements of the Plaintiffs' Mark and Plaintiffs' Works, and/or a substantially similar copy of the Plaintiffs' Works linked to the same seller or linked to any other alias seller identification name being used and/or controlled by Defendants to promote, offer for sale and/or sell goods bearing and/or using counterfeits and/or infringements of the Plaintiffs' Mark and Plaintiffs' Works, and/or substantially similar copy of the Plaintiffs' Works.

e. Entry of an Order that, upon Plaintiffs' request, any Internet marketplace website operators and/or administrators who are provided with notice of the injunction, including but not limited to online marketplaces hosted by Amazon.com, eBay.com, Aliexpress.com, or shopify.com, immediately cease fulfillment of and sequester all goods of each Defendant or other Seller under a Seller ID bearing and/or using one or more of the Plaintiffs' Mark and

Plaintiffs' Works, and/or a substantially similar copy of the Plaintiffs' Works in its inventory, possession, custody, or control, and surrender those goods to Plaintiffs.

f. Entry of an order that enjoins Defendants from using, linking, transferring, selling, exercising control over, or otherwise owning Seller IDs and Domain Names, or any other domain name or online marketplace account that is being used to sell or is the means by which Defendants could continue to sell the Infringing Products.

g. Entry of an order, that enjoins, the Third Party Service Providers and Financial Institutions from operating or hosting websites at the Domain Names and any other domain names registered or operated by Defendants that are being used and/or controlled by Defendants to promote, offer for sale and/or sell goods bearing and/or using counterfeits and/or infringements of the Plaintiffs' Mark and Plaintiffs' Works, and/or substantially similar copy of the Plaintiffs' Works.

h. The domain name registries for the Defendant's Domain Names, including but not limited to, VeriSign, Inc., Neustar, Inc., Afilias Limited, CentralNic, Nominent, and the Public Interest Registry, within three (3) business days of receipt of this Order or prior to expiration of this Order, whichever date shall occur first, shall at Plaintiffs' choosing:

(1) unlock and change the registrar of record for the Defendant Domain Names to a registrar of Plaintiffs' selection until further ordered by this Court; or

(2) disable the Defendant's Domain Names and make them inactive and untransferable until further ordered by this Court.

i. The domain name registrars, including but not limited to, GoDaddy Operating Company, LLC ("GoDaddy"), Name.com, PDR LTD. d/b/a PublicDomainRegistry ("PDR"),

and Namecheap Inc. ("Namecheap"), within three (3) business days of receipt of this Order or prior to expiration of this Order, whichever data shall occur first, shall take any steps necessary to transfer the Defendant's Domain Names to a registrar account of Plaintiffs selection so that the Defendant's Domain Names can be redirected or disabled until further ordered by this Court.

j. Entry of an Order that, upon Plaintiffs' request, those in privity with Defendants and those with notice of the injunction, including any online marketplaces, social media platforms, Facebook, YouTube, LinkedIn, Twitter, Internet search engines such as Google, Bing and Yahoo, web hosts for the Defendant's Domain Names, and domain name registrars, shall: (1) disable and cease providing services for any accounts through which Defendants engage in the offering for sale or sale of the Infringing Products, including any accounts associated with the Defendants listing on Schedule A; (2) disable and cease displaying any advertisements used by or associated with Defendants in connection with the sale of Infringing Products; and (3) take all steps necessary to prevent links to the Defendant Domain Names identified on Schedule A from displaying search results, including but not limited to removing links to the Defendant Domain Names from any search index.

k. Entry of an order requiring Defendants to account to and pay Plaintiffs for all profits and damages resulting from Defendants' infringing and unfairly competitive activities and that the award to Plaintiffs be trebled, as provided for under 15 U.S.C. §1117.

l. Entry of an award pursuant to 15 U.S.C. § 1117 (a) and (b) of Plaintiffs' costs and reasonable attorneys' fees and investigative fees associated with bringing this action.

m. Entry an order awarding Plaintiff damages adequate to compensate for the infringement of its patent, but in no event less than a reasonable royalty for the use made of the

invention by the Defendants, together with interest and costs as fixed by the Court pursuant to 35 U.S.C. § 284 and that the award be trebled as provided for under 35 U.S.C. §284.

n. Entry of an Order finding that this case is exceptional and an award to Plaintiff of its attorney fees and costs as provided by for under 35 U.S.C. § 285.

o. Entry of an Order that, upon Plaintiff's request, any financial institutions, payment processors, banks, escrow services, money transmitters, or marketplace platforms, and their related companies and affiliates, identify and restrain all funds, up to and including the total amount of judgment, in all financial accounts and/or sub-accounts used in connection with the Seller IDs or other domain names, alias seller identification names, or e-commerce store names or store URLs used by Defendants presently or in the future, as well as any other related accounts of the same customer(s) and any other accounts which transfer funds into the same financial institution account(s), to be surrendered to Plaintiff in partial satisfaction of the monetary judgment entered herein.

p. Entry of an award of pre-judgment interest on the judgment amount.

q. Entry of an order for any further relief as the Court may deem just and proper.

## DEMAND FOR JURY TRIAL

Plaintiffs respectfully demand a trial by jury on all claims.

Respectfully submitted,

September 15, 2020

/s/ Stanley D. Ference III

Stanley D. Ference III
Pa. ID No. 59899
courts@ferencelaw.com

Brian Samuel Malkin
Pa. ID No. 70448
bmalkin@ferencelaw.com

FERENCE & ASSOCIATES LLC
409 Broad Street
Pittsburgh, Pennsylvania 15143
(412) 741-8400 - Telephone
(412) 741-9292 - Facsimile

Attorneys for Plaintiffs
Gorge Design Group, LLC, and Kirby Erdely

# Schedule "A"
# Defendants With Store Name and Seller ID

| Defendant No. | Defendant/Store Name | Seller ID/Subject Domain Name |
|---|---|---|
| 1 | Syarme | A1LE71SBGVALWM |
| 2 | CAMPMAX | A26DVICKBT7YGQ |
| 3 | Freeland Outdoor | ADN9631RYBGI6 |
| 4 | goumaiZILIAO | A2J37P0QUG0BZ3 |
| 5 | Grassland-all | A2F6HPEI0EMAB3 |
| 6 | MAMAY SUMARNA | A2EQNA5A1HK6E8 |
| 7 | meaning xuansheng | A1ANGYFOI0TPHS |
| 8 | NVHUNG36 | A3TM8FWSFXDTL2 |
| 9 | Iam_1786 | 372820707148 |
| 10 | skycorpworld | 323981553860 |
| 11 | Aimfiree Store | 728882 |
| 12 | alexnld | alexnld.com |
| 13 | anontee | anontee.com |
| 14 | banggood | usa.banggood.com |
| 15 | bbfat | shiprole.com |
| 16 | berrous | berrous.com |
| 17 | bryces-shop | bryces.vip |
| 18 | capions | capions.com |
| 19 | coohome | coohome.org |
| 20 | DANCEMAGIC.SHOP | dancemagic.shop |
| 21 | inscriptionlife | inscriptionlife.com |

| Defendant No. | Defendant/Store Name | Seller ID/Subject Domain Name |
|---|---|---|
| 22 | izyndeal | izyndeal.com |
| 23 | lilymi | lilymi.com |
| 24 | locasdeals | locasdeals.com |
| 25 | mercadomagico | mercadomagico.com |
| 26 | motioncomm | motioncomm.com |
| 27 | myragrap | myragrap.com |
| 28 | nakathalie | oughteu.com |
| 29 | orange dancer | orangedancer.com |
| 30 | protelikes | protelikes.com |
| 31 | quandarn | another2.com |
| 32 | reachssgf | shop.reachssgf.com |
| 33 | shopbestyo | shopbestyo.com |
| 34 | showcasesf | showcasesf.com |
| 35 | TODDEALS | toddeals.com |
| 36 | tsmalls | tsmalls.shop |
| 37 | URBAN & HAWK | urbanandhawk.com |
| 38 | waterbests | waterbests.com |
| 39 | werebear | werebear.shop |

## LISTING OF EXHIBITS

Exhibit 1.....Printout of kickstarter.com page for ORANGE SCREW
Exhibit 2.....Printout of orangescrew.com
Exhibit 3.....U.S. Patent No. 7,309,198

# Exhibit 1

KICKSTARTER

Explore Start a project Search Log in

Share this project

Done

Share Tweet Embed

Share this project

Done

Tweet

Share

Email

# Orange Screw: The Ultimate Ground Anchor

The Orange Screw is an innovative and easy to use ground anchor made of 100% recycled materials and manufactured in Washington state.

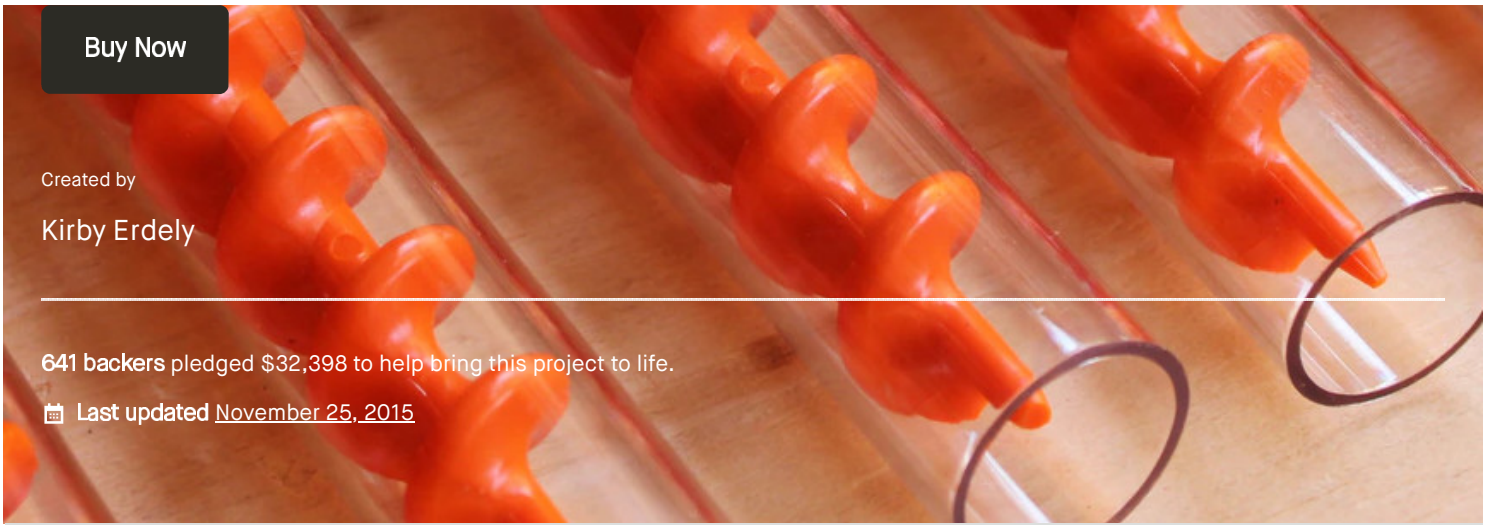

Buy Now

Created by

Kirby Erdely

641 backers pledged $32,398 to help bring this project to life.

Last updated November 25, 2015

Rewards Campaign FAQ Updates 12 Comments 70 Community

## About

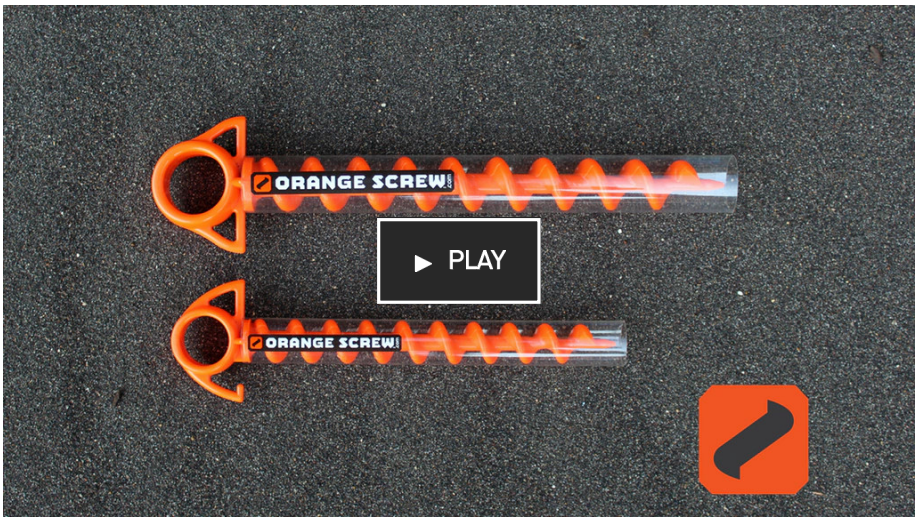


### Orange Screw: The Ultimate Ground Anchor

White Salmon, WA  Product Design

**$32,398**
pledged of $15,000 goal

**641**
backers

ORANGE SCREW.com

## Support

### Pledge $1 or more

Thanks for your support! This reward is an opportunity to give a donation to help make Orange Screw a reality. We can't do it without you!

ESTIMATED DELIVERY
Sep 2015

8 backers

### Pledge $6 or more

Beverage Koozie: Keep your drinks cold while supporting Orange Screw: The one screw you will never forget!

ESTIMATED DELIVERY
Nov 2015

SHIPS TO
Only United States

7 backers

### Pledge $12 or more

2 SMALL Orange Screws.

The **Orange Screw** is the ultimate ground anchor. They are reliable, easy to use, made of ***100% recycled materials*** and ***manufactured in the U.S.A.*** Orange Screws will secure pets; anchor RV awnings; hold tarps over boats, ATVs and firewood; as well as ensure tents and sunshades stay put. If you have ever experienced a tent stake or ground anchor fail in the wind or rain, you will understand why we wanted to create a better product.

Orange Screws are available in two sizes.

The protective sleeve turns into a drive handle for increased leverage in tough soils.

ESTIMATED DELIVERY
Nov 2015

SHIPS TO
Anywhere in the world

44 backers

## Pledge $22 or more

4 SMALL Orange Screws.

ESTIMATED DELIVERY
Nov 2015

SHIPS TO
Anywhere in the world

178 backers

## Pledge $24 or more

2 LARGE Orange Screws.

ESTIMATED DELIVERY
Nov 2015

SHIPS TO
Anywhere in the world

43 backers

## Pledge $35 or more

2 SMALL and 2 LARGE Orange Screws.

ESTIMATED DELIVERY
Nov 2015

SHIPS TO
Anywhere in the world

117 backers

## Pledge $42 or more

8 SMALL Orange Screws

ESTIMATED DELIVERY
Nov 2015

SHIPS TO
Anywhere in the world

54 backers

Orange Screws are lightweight, portable and easy to use.

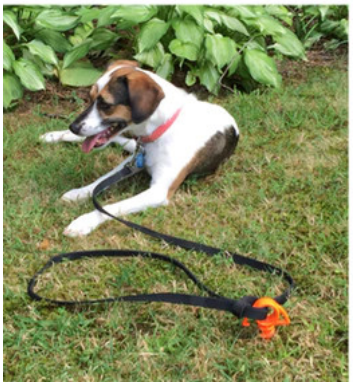

Orange Screws are safe and reliable animal tethers for all your pets- large and small.

## Pledge $46 or more

4 LARGE Orange Screws.

ESTIMATED DELIVERY
Nov 2015

SHIPS TO
Anywhere in the world

31 backers

## Pledge $50 or more

4 SMALL and 2 LARGE Orange Screws + 2 Beverage Koozies.

ESTIMATED DELIVERY
Nov 2015

SHIPS TO
Anywhere in the world

42 backers

## Pledge $70 or more

4 SMALL and 4 LARGE Orange Screws.

ESTIMATED DELIVERY
Nov 2015

SHIPS TO
Anywhere in the world

70 backers

## Pledge $90 or more

8 LARGE Orange Screws.

ESTIMATED DELIVERY
Nov 2015

SHIPS TO
Anywhere in the world

9 backers

## Pledge $140 or more

8 SMALL and 8 LARGE Orange Screws

ESTIMATED DELIVERY
Nov 2015

SHIPS TO
Anywhere in the world

Orange Screws work in a wide range of soils and will keep your tent, rainfly, beach shelter or shade wing where you put it.

Orange Screws are perfect companions for any adventure.

35 backers

## Funding period

Aug 15 2015 - Sep 14 2015 (30 days)

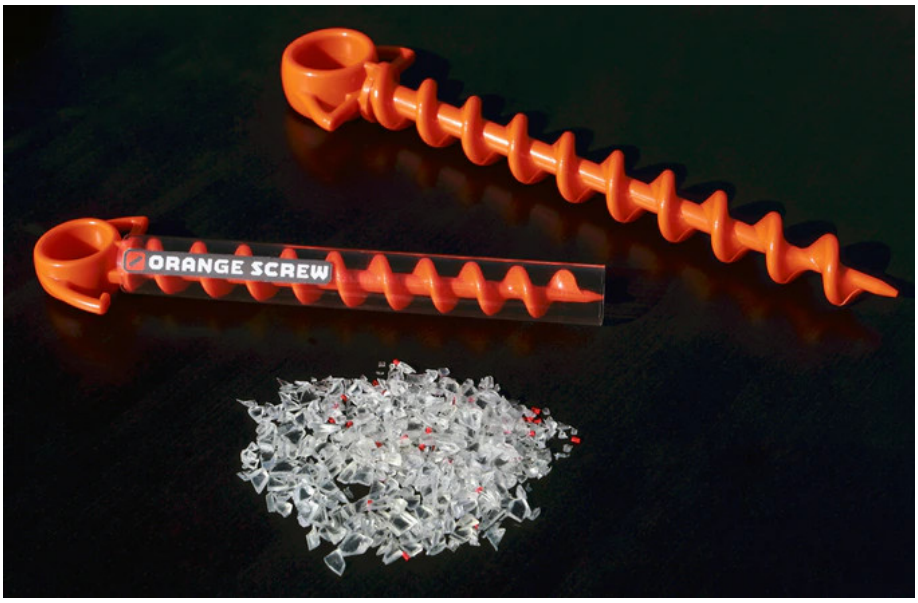


Orange Screws are made of 100% recycled materials and proudly made in the USA.

## Orange Screws are available in two sizes to fit any job!

At 1.8 ounces and 9 1/2 inches long, the ***SMALL Orange Screw*** packs a lot of power into a compact package. It's easy to carry and is the perfect multi-use tool for camping, picnics with your pet and many other uses around the home and garden.

The ***LARGE Orange Screw*** weighs only 3.6 ounces and is just over one foot long. It is the workhorse of our product line and will secure the most difficult loads in windy and unpredictable conditions

## 100% Recycled Materials, Made in the USA

We believe that manufacturing useful and long lasting products in the United States is vital to the economic and social health of our local community and nation. We are proud to manufacture Orange Screws in Vancouver, Washington out of recycled materials.

Orange Screws are proudly made in the United States of 100% recycled polycarbonate plastic.

## Developed and Tested in the Columbia River Gorge

It's windy here, really windy. Wind is the main enemy of any ground anchor or tent stake. You can count on Orange Screws to keep your stuff where you put it- in any weather. Our patented helical shape was refined by years of prototyping in varying soil and weather conditions. The final design has

incredible holding power with the smoothest insertion and removal of any ground anchor we have tested.

Our home: The Columbia River Gorge.

## Family-Owned

Orange Screw is a family-owned business based in White Salmon, WA in the heart of the Columbia River Gorge. We are a family of active outdoor enthusiasts with backgrounds in business and design.

Orange Screws have been developed and tested by the Erdely family. We have a current US Patent on the Orange Screw.

## Why Kickstarter?

We have chosen Kickstarter as a fundraising vehicle because we wish to remain a family-owned business and continue to manufacture our products in the USA. Not seeking outside investors gives our family the flexibility to make decisions based not solely on maximum profit potential. The goal of Orange Screw is to become a success story for high-quality and affordable American-made products. It is our mission to make decisions that are good for the planet and our local economy while making awesome products.

Our family has invested significant funds into this project. We own two beautiful American-made molds that are at our factory partner in Vancouver, WA. We have successfully navigated the patent process and have a current US patent for the Orange Screw.

We believe that the Orange Screw is a commercially viable product with wide market appeal. We are hoping for enough Kickstarter support and encouragement to fund our first full-scale production run while gaining the attention of future retailers.

The design is complete, prototypes and molds have been tested, materials are proven- we are now prepared to launch our first production run. Our goal of $15,000 will buy materials, manufacture product and help finish the design of the environmentally-friendly packaging.

We are humbly grateful to those who have supported the Orange Screw project thus far and are really looking forward to working with you and hearing your comments.

## Rewards for our Backers:

We have prepared some great rewards for our backers! We all know someone who can use a few Orange Screws and **right now Kickstarter is the only place you can get them**. We are committed to have all rewards shipped well before Christmas so don't be afraid to fill up the stocking of your favorite outdoor lover.

*All pledged amounts include sales tax when appropriate.

$1+ Reward: A humble Thank You from the team at Orange Screw

$6 Reward: Neoprene drink koozie. To order a koozie in addition to another reward level, simply add $6 to your total during the payment phase.

$12 Reward: 2 SMALL Orange Screws

$22 Reward: 4 SMALL Orange Screws

$24 Reward: 2 LARGE Orange Screws

$35 Reward: 2 SMALL and 2 LARGE Orange Screws

$42 Reward: 8 SMALL Orange Screws

$46 Reward: 4 LARGE Orange Screws

$50 Reward: 4 SMALL and 2 LARGE Orange Screws PLUS 2 Beverage Koozies

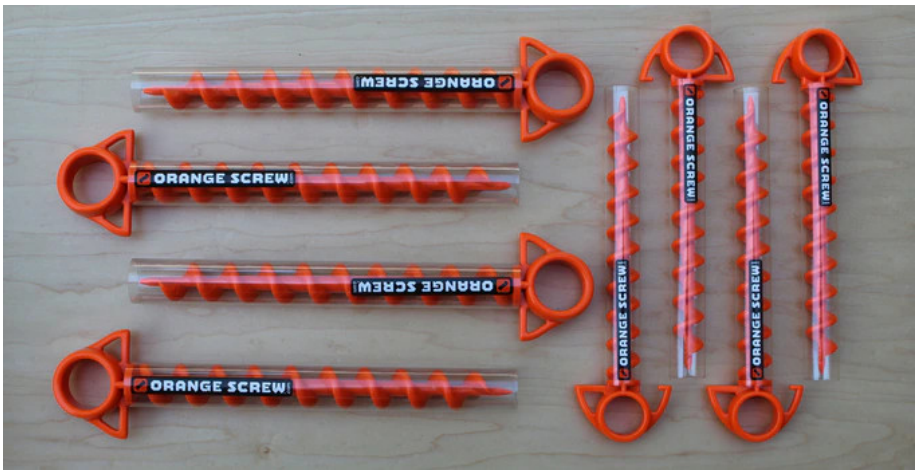


$70 Reward: 4 SMALL and 4 LARGE Orange Screws

$90 Reward: 8 LARGE Orange Screws

$140 Reward: 8 SMALL Orange Screws and 8 LARGE Orange Screws

ORANGE SCREW.com

## Risks and challenges

We believe we have done everything we can to minimize the risks and challenges of this project. Orange Screw has an advisory board filled with friends that have skills in product design, business development and national sales. We have had Orange Screw prototypes in the field for the last year being tested under various conditions.

We extensively researched injection molders that would work with a small start-up while having the ability to grow with us and handle large numbers in the future. Our chosen factory is a second generation family-owned business with experts in materials and engineering on staff. Our molds have been tested, tuned and are are ready to produce. Best of all, we are a one hour drive from the factory so it's easy to be involved in the process and deal with any issues that may come up.

The most significant challenge we faced was ensuring that the fit between the Orange Screw itself and the clear extruded sleeve was precise. We carefully reviewed the measurements and the material properties and our engineering team signed off on the tolerances for a perfect fit. The extrusion tooling is currently being built and we will have the actual tubing samples to confirm the fit, feel and finish by the time our Kickstarter campaign ends.

As a result of our thorough research, we are confident that we will be able to provide a premium product for our backers in a timely manner. We will communicate with backers as the campaign progresses and we anticipate a very smooth, accurate and on-schedule fulfillment.

Learn about accountability on Kickstarter

Questions about this project? **Check out the FAQ**

Report this project to Kickstarter

EXPLORE

Arts
Comics & Illustration
Design & Tech
Film

Food & Craft
Games
Music
Publishing

ABOUT

About us
Our charter
Stats
Press
Jobs

SUPPORT

Help Center
Our Rules
Creator Handbook
Patrons

HELLO

Newsletters
Mobile apps
Kickstarter Blog
Engineering Blog
Research

MORE FROM KICKSTARTER

The Creative Independent
Kickstarter Magazine
Kickstarter Podcast

Kickstarter, PBC © 2019

English

$ US Dollar (USD)

Trust and Safety Terms of Use Privacy Policy Cookie Policy

# Exhibit 2

## THE ONE GROUND SCREW THAT DOES IT ALL!

Orange Screw® ground anchors take care of your stuff so you can focus on what you love to do. Anchor the beach shelter and head out for a surf knowing it's secure if the wind picks up. Tether your llama and sleep soundly because you know they aren't going on a late night walkabout. Lock down an inflatable bounce house and relax knowing that the big kids are not going to send it into the neighbor's garden.

## ORANGE SCREW® GROUND ANCHORS ARE MADE IN THE USA AND AVAILABLE IN TWO SIZES

### LARGE GROUND ANCHOR

**SPECIFICATIONS**

**Length**: 12 1/4”

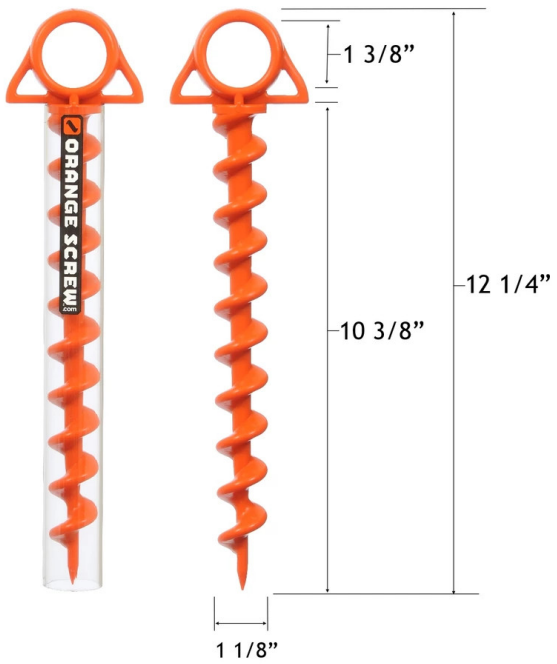


**Thread Diameter**: 1 1/8”

**Weight**: 3.6 oz

**Material**: Recycled Polycarbonate

**MADE IN THE USA**

SHOP NOW

## SMALL GROUND ANCHOR

**SPECIFICATIONS**

**Length**: 9 1/2”

**Thread Diameter**: 7/8”

**Weight**: 1.8 oz

**Material**: Recycled Polycarbonate

**MADE IN THE USA**

SHOP NOW

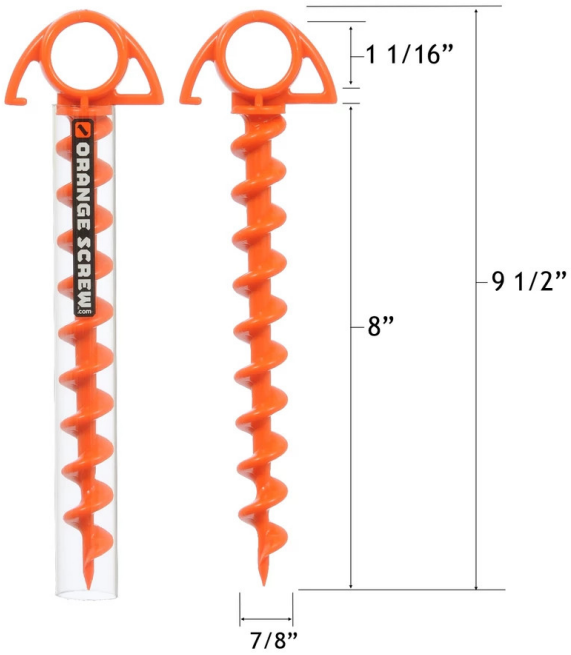

## THE MANY USES OF THE ORANGE SCREW® ULTIMATE GROUND ANCHOR

### SECURE YOUR

- Tent
- Beach Shelter
- Dog
- Inflatable Holiday Decorations
- Hunting Blind
- Raft
- Bounce House
- RV Awning

### USE WHEN YOU ARE

- Camping

Hunting

Decorating

Boating

Gardening

RVing

Entertaining

## EASY TO USE IN

Grass

Beach Sand

Firm and Soft Soil

## LEARN MORE ABOUT OUR ACCESSORIES

PARACORD - TEXTURED POSI-LOCK™ - STEALTH GRAY

$ 9.95

T-GRIP TOOL

$ 2.50

PARACORD - TEXTURED POSI-LOCK™ - REFLECTIVE ORANGE

$ 11.95

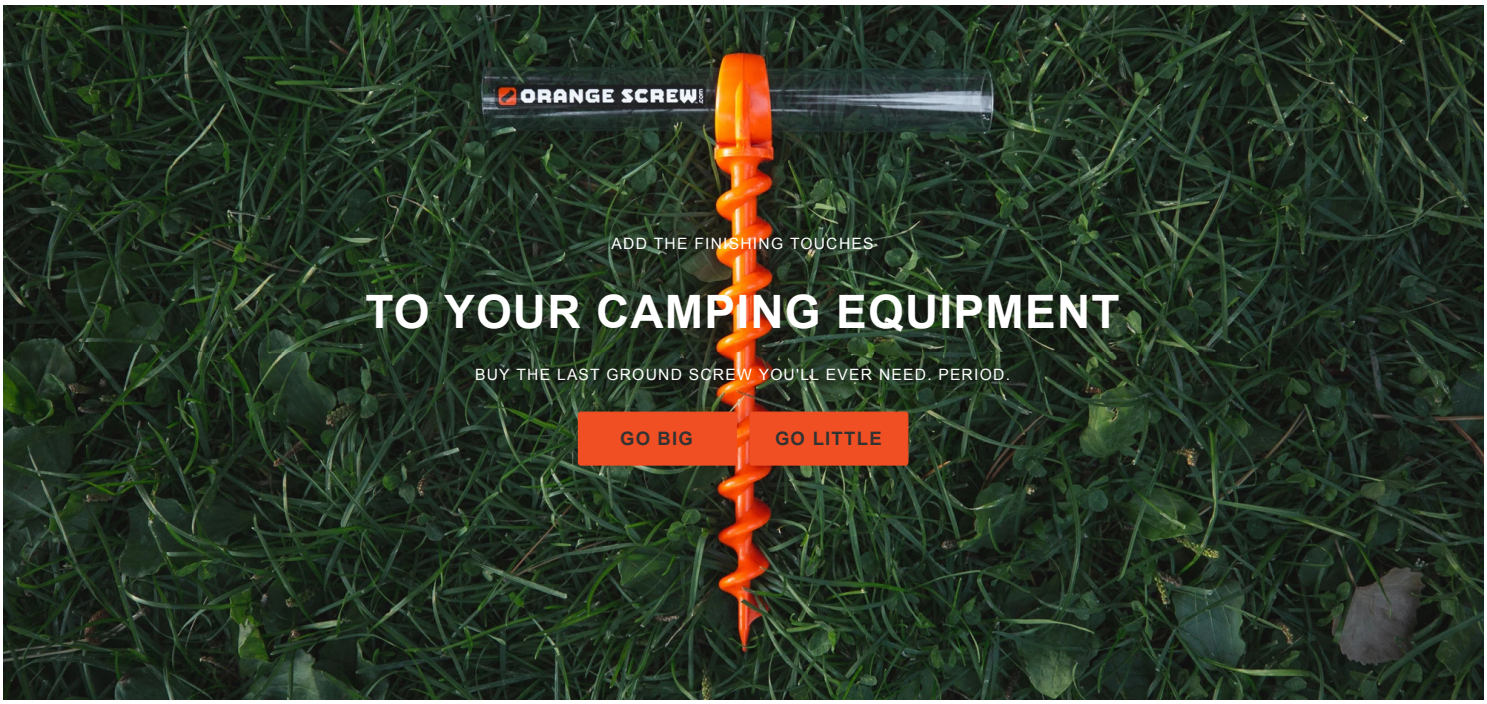


## ORANGE SCREW™ PATENTED GROUND ANCHORS

The Orange Screw® ground anchor is an innovative screw-in ground anchor made of 100% recycled materials and manufactured in the USA. Before we invented the Orange Screw™, ground anchors consisted of simple tent stakes, rust-prone spiral dog-tie outs, heavy weights, or cumbersome metal augers. Orange Screw™ ground anchors re-define what a ground screw can do with their slick and durable design. They are portable, easy-to-use, and perform in a wider range of soil conditions than any other portable ground anchor.

This strong and simple multi-use tool will replace your tent stakes and metal dog tie-outs; anchor RV awnings and sun shelters; hold tarps over boats, ATVs and firewood; and so much more. Join the revolution and simplify your kit! Once you use our ground screws, you won't want to use anything else. Seriously.

Oh yeah.... they come with a lifetime breakage guarantee. Sweet!

### SUBSCRIBE

Sign up to receive our latest promotions, new product releases & more.

Enter your email address...

SIGN UP

ORANGE SCREW

WE BELIEVE IN PROTECTING THE ENVIRONMENT

THE ULTIMATE GROUND ANCHOR

OUR STORY

© 2019 Orange Screw.

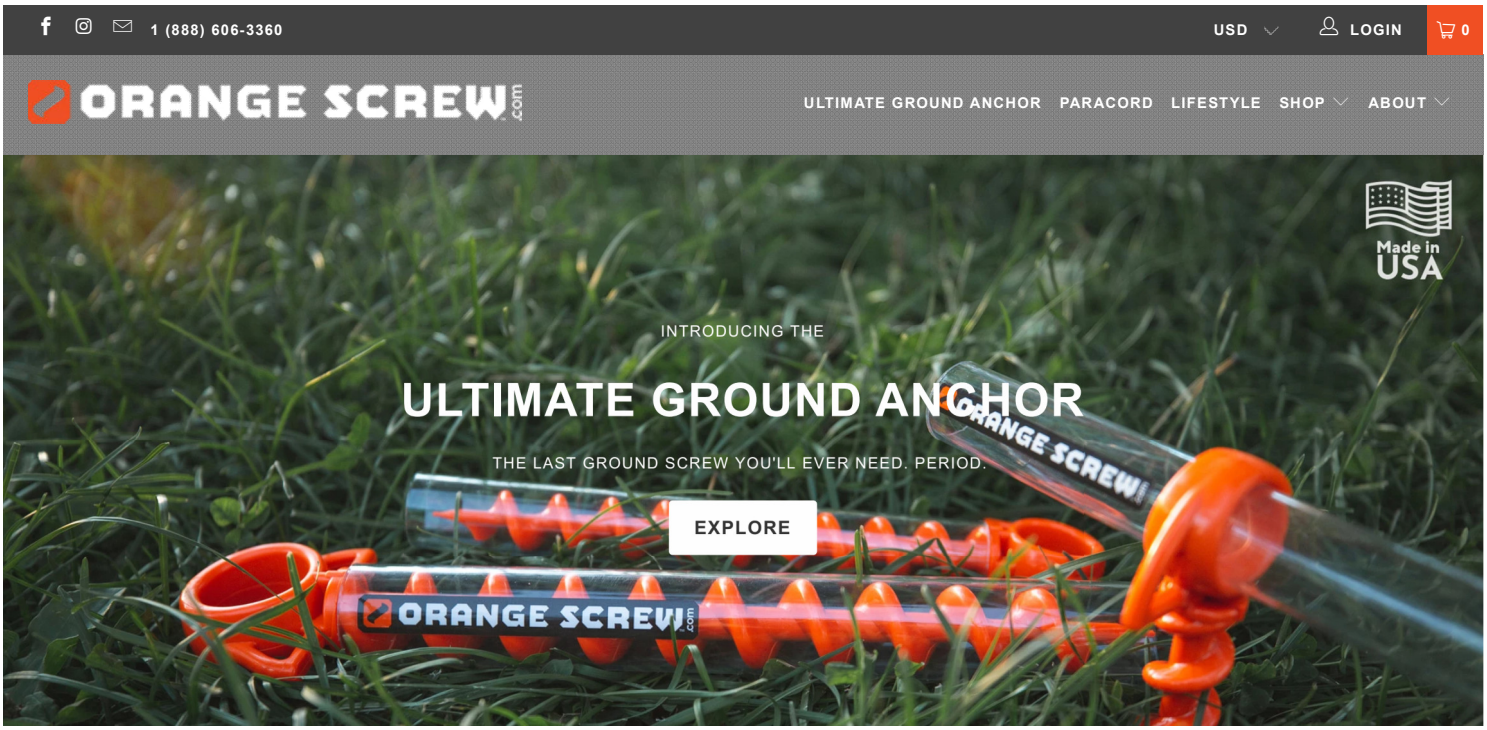


**SHOP BEST SELLING GROUND ANCHORS**

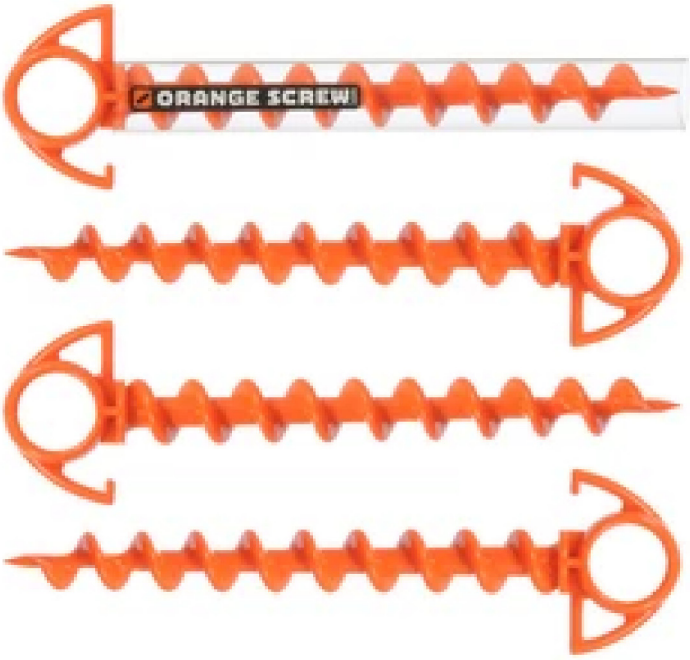


SMALL 4-PACK

LARGE 2-PACK

SMALL ANCHOR - 9"

LARGE ANCHOR - 12"

PARACORD REFLECTIVE ORANGE

PARACORD STEALTH GRAY

T-GRIP TOOL

LIFESTYLE

## THE ULTIMATE TENT STAKE AND GROUND ANCHOR

You can leave all of the other anchor screws

behind and let Orange Screw® solve your ground security needs. Once you secure your stuff with an Orange Screw® ground anchor, you can relax and focus on what you came to do.

Our ground anchors are easy-to-use and have hundreds of uses.

How will you use them?

VIEW ALL

## EASY TO USE

Twist the screw in to the ground using the clear tube for additional leverage and then tie off anything that needs fastening. Dogs, tents, sunshades, bounce houses...whatever.

You got this.

LEARN MORE

## MADE IN THE USA OF RECYCLED MATERIALS

100% recycled polycarbonate plastics go in to our ground anchors. All of our products are developed and manufactured in Washington state.

The perfect recipe.

SHOP NOW

It's time to simplify your gear and use the one ground anchor that does it all! Orange Screw® ground anchors are lightweight, rust-proof, nearly indestructible, and made entirely in the USA from 100% recycled materials in Washington state.

## GROUND ANCHORS FOR THE MASSES - LEARN MORE

Orange Screw® The Ultimate Ground Anchor 2016

### VERY STURDY

When encountering larger rocks the anchor holds up nicely and is not damaged. It withstands a great deal of pulling pressure with no issues. I would recommend and buy again.

John M.
**Amazon Verified Purchase**

## SCAM ALERT

**The Bait and Switch scam is back!** We are currently seeing many Facebook and Instagram ads that claim to be selling our products for a big discount. **These scammers have stolen our photos, videos, and written content and they will ship you something from China that is completely different.** Please help us by reporting any of the ads you see. **Thanks for supporting us and our mission to manufacture everything in the USA.**

LEARN ABOUT THE SCAM

## SUBSCRIBE

Sign up to receive our latest promotions, new product releases & more.

Enter your email address...

SIGN UP

ORANGE SCREW

WE BELIEVE IN PROTECTING THE ENVIRONMENT

THE ULTIMATE GROUND ANCHOR

OUR STORY

© 2019 Orange Screw.

# Exhibit 3

UNITED STATES PATENT AND TRADEMARK OFFICE

# Assignment abstract of title for Application 11287877

| Invention title/Inventor | Patent | Publication | Application | PCT | International registration |
|---|---|---|---|---|---|
| REUSABLE THREADED TIE DOWN<br>David J. Brown | 7309198<br>Dec 18, 2007 | | 11287877<br>Nov 28, 2005 | | |

## Assignments (1 total)

**Assignment 1**

| Reel/frame | Execution date | Date recorded | Properties | Pages |
|---|---|---|---|---|
| 034755/0672 | Dec 19, 2014 | Jan 20, 2015 | 1 | 2 |

Conveyance
ASSIGNMENT OF ASSIGNORS INTEREST (SEE DOCUMENT FOR DETAILS).

Assignors
BROWN, DAVID J.

Correspondent
KIRBY G. ERDELY
77 BLACKBERRY LANE
P.O.BOX 1773
WHITE SALMON, WA 98672

Assignee
ERDELY, KIRBY G.
77 BLACKBERRY LANE
P.O. BOX 1773
WHITE SALMON, WASHINGTON 98672

US007309198B1

(12) **United States Patent**
**Brown**

(10) **Patent No.: US 7,309,198 B1**
(45) **Date of Patent: Dec. 18, 2007**

(54) **REUSABLE THREADED TIE DOWN**

(76) Inventor: **David J. Brown**, 145 Rue Cezzan, Lavonia, GA (US) 30553

( * ) Notice: Subject to any disclaimer, the term of this patent is extended or adjusted under 35 U.S.C. 154(b) by 94 days.

(21) Appl. No.: **11/287,877**

(22) Filed: **Nov. 28, 2005**

(51) **Int. Cl.**
***B61D 45/00*** (2006.01)

(52) **U.S. Cl.** ..... **410/101**

(58) **Field of Classification Search** ..... 410/101, 410/96

See application file for complete search history.

(56) **References Cited**

U.S. PATENT DOCUMENTS

4,717,147 A * 1/1988 Rochelle ..... 482/93
D347,980 S * 6/1994 Butch ..... D8/1
D381,892 S 8/1997 Porter et al.
D398,363 S * 9/1998 LoBue ..... D21/840
D492,586 S 7/2004 Rimer, Jr.

* cited by examiner

*Primary Examiner*—H Gutman
(74) *Attorney, Agent, or Firm*—J. Bennett Mullinax, LLC

(57) **ABSTRACT**

A reusable tie down is provided having a threaded portion for insertion in soil along with an arcuate head defining an aperture for securing a rope or line to the tie down. The tie down is constructed of a high impact, high tensile strength polycarbonate which may be deformed under a heavy load and then returned to a normal shape by the application of heat.

**5 Claims, 3 Drawing Sheets**

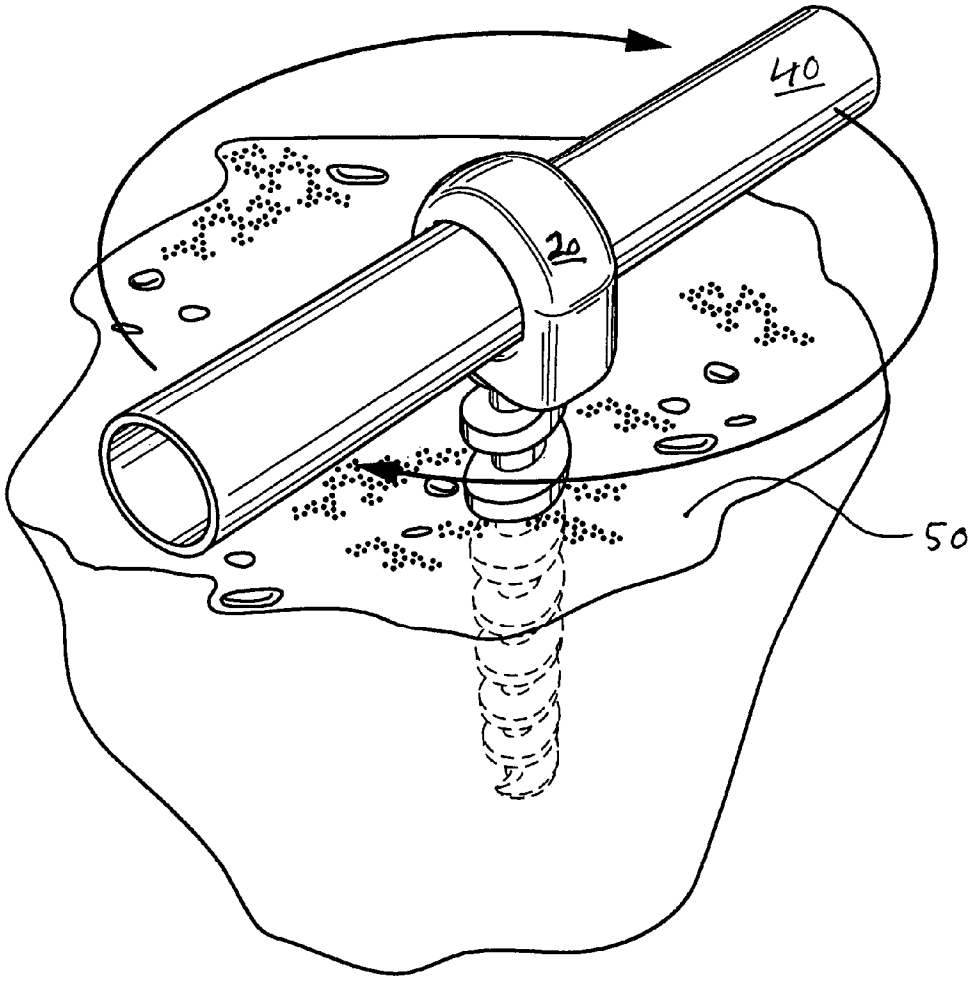

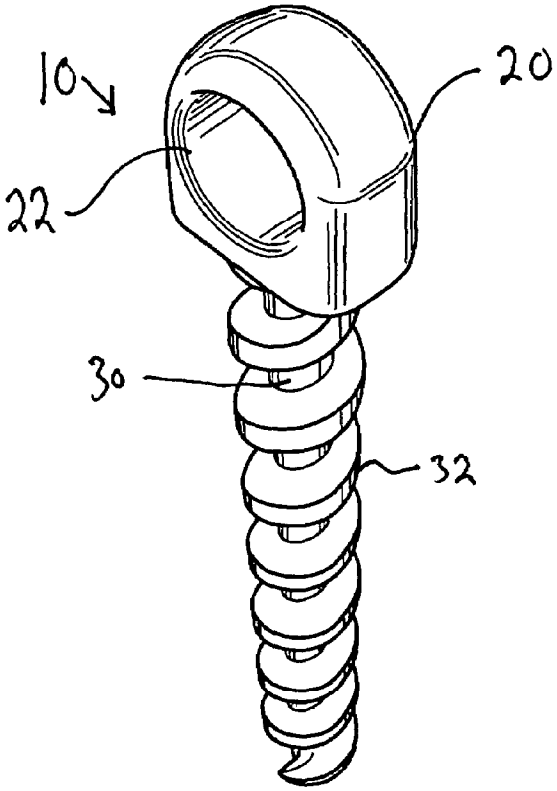


FIG. 1

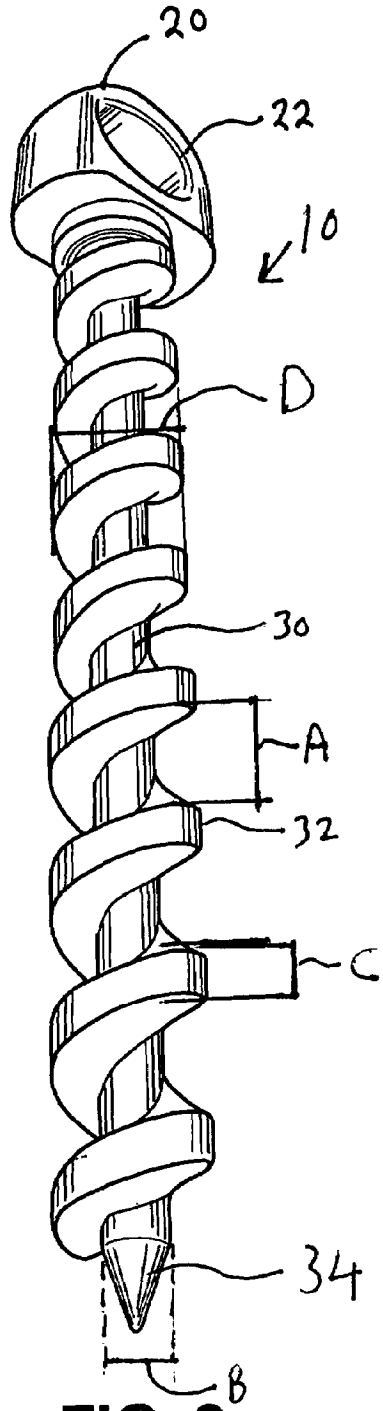


FIG. 2

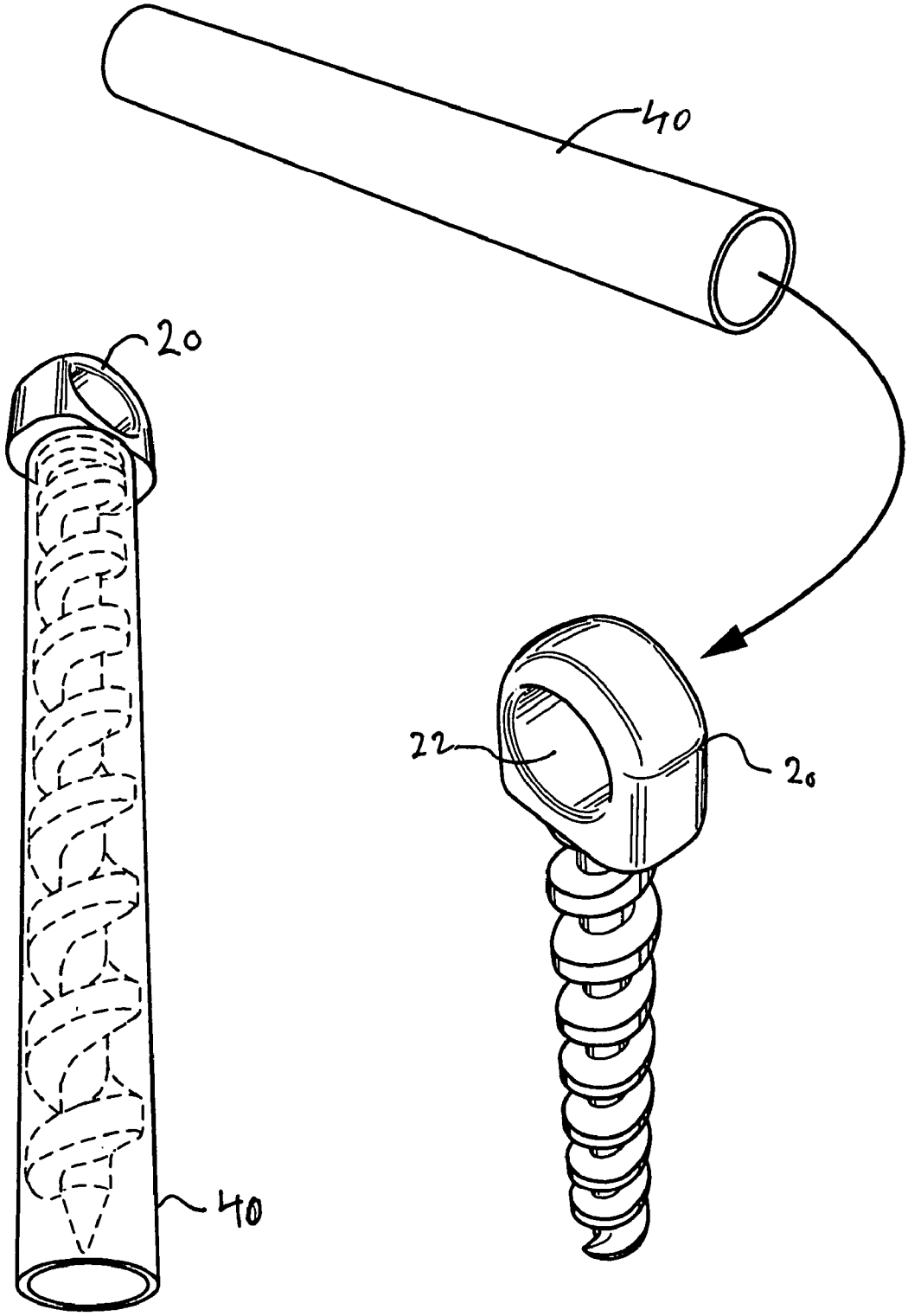


FIG. 3

FIG. 4

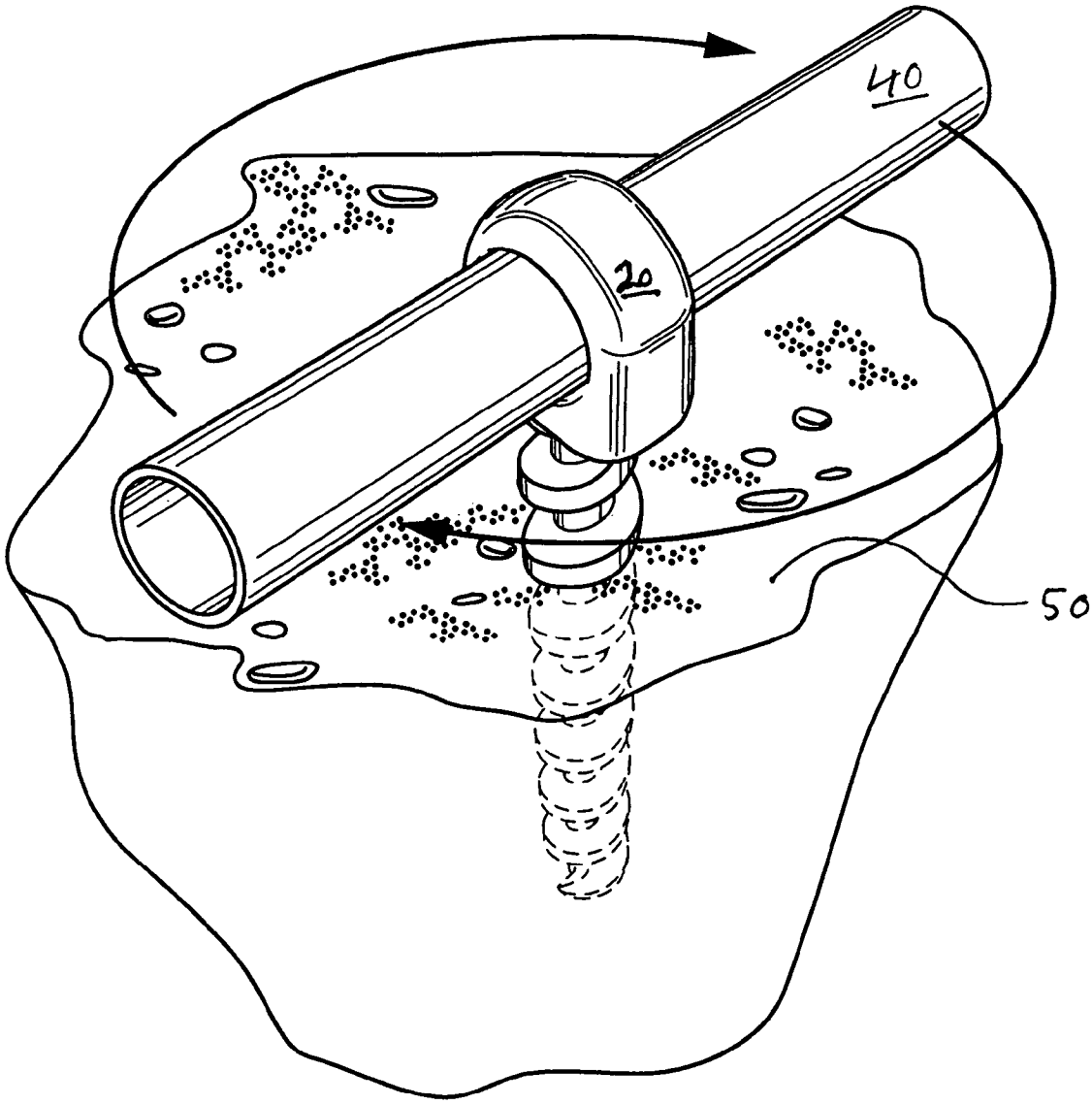


FIG. 5

# REUSABLE THREADED TIE DOWN

## FIELD OF THE INVENTION

This invention is directed towards a reusable threaded tie down. The tie down includes a protective sheath which can be used as a handle for insertion and removal of the tie down into sand, soil, gravel, and similar materials. The tie down is suitable for a variety of uses including tethers, beach umbrellas, tent stakes, support stakes for new trees and shrubs, and pet tie downs.

## BACKGROUND OF THE INVENTION

This invention relates to threaded or helical tie downs for use in soil, lawns, campgrounds, and beaches. As seen in reference to U.S. Pat. Nos. D381892 and D492586, the specifications of which are incorporated herein by reference, it is known to provide a threaded structure which includes a bracket or similar structure through which a rope, wire, or similar line may be attached.

Many of the threaded tie downs in the prior art are provided by metal or rigid plastics which are subject to rust, breakage, or permanent deformation if bent. Further, the cleat, head, or other attachment point of the tie down frequently has either a shape, contour, or outer dimensions which render it unsuitable for certain applications. For instance, animal tie downs are often used in association with a length of chain. The chain will frequently entangle around the attachment head of the tie down, interfering with the animal's range of movement. Further, many tie downs have an attachment head which is easily damaged if accidentally struck, while other designs pose an injury risk because of the shape of the head should one trip and/or land on an installed tie down.

Accordingly, there remains room for improvement and variation within the art.

## SUMMARY OF THE INVENTION

It is one aspect of at least one of the present embodiments to provide for a threaded tie down which can be manually inserted and removed in a variety of soil types.

It is yet another aspect of at least one of the present embodiments to provide for a helical tie down which has a protective sheath surrounding the threaded portion of the tie down, the sheath further providing a handle for insertion through the head of the tie down to facilitate the installation and removal of the tie down from a substrate.

It is a further aspect of at least one embodiment of the present invention to provide for a helical tie down molded from a high impact polycarbonate plastic and having a tensile strength in excess of 22,000 pounds.

It is yet a further aspect of at least one embodiment of the present invention to provide for a helical tie down having a threaded portion attached to a head portion, the head portion containing an opening therethrough for securing a line, rope, or similar structure, the tie down head having a smooth, curved exterior surface.

It is a further aspect of at least one embodiment of the present invention to provide for a helical tie down which is provided from a high impact elastic polycarbonate which allows the tie down to be bent at an angle in excess of 30° and which can be restored to the original shape once the load is removed.



These and other features, aspects, and advantages of the present invention will become better understood with reference to the following description and appended claims.

## BRIEF DESCRIPTION OF THE DRAWINGS

A fully enabling disclosure of the present invention, including the best mode thereof to one of ordinary skill in the art, is set forth more particularly in the remainder of the specification, including reference to the accompanying drawings.

FIG. **1** is an upper perspective view of a helical anchor of the present invention.

FIG. **2** is an elevational view of a helical anchor as seen in FIG. **1**.

FIG. **3** illustrates the helical anchor with a protective sheath in place surrounding the threaded portions of the helical anchor.

FIGS. **4** and **5** illustrate placement of the protective sheath through the head of the helical anchor to facilitate the insertion and removal of the helical anchor into the soil.

## DESCRIPTION OF THE PREFERRED EMBODIMENT

Reference will now be made in detail to the embodiments of the invention, one or more examples of which are set forth below. Each example is provided by way of explanation of the invention, not limitation of the invention. In fact, it will be apparent to those skilled in the art that various modifications and variations can be made in the present invention without departing from the scope or spirit of the invention. For instance, features illustrated or described as part of one embodiment can be used on another embodiment to yield a still further embodiment. Thus, it is intended that the present invention cover such modifications and variations as come within the scope of the appended claims and their equivalents. Other objects, features, and aspects of the present invention are disclosed in the following detailed description. It is to be understood by one of ordinary skill in the art that the present discussion is a description of exemplary embodiments only and is not intended as limiting the broader aspects of the present invention, which broader aspects are embodied in the exemplary constructions.

In describing the various figures herein, the same reference numbers are used throughout to describe the same material, apparatus, or process pathway. To avoid redundancy, detailed descriptions of much of the apparatus once described in relation to a figure is not repeated in the descriptions of subsequent figures, although such apparatus or process is labeled with the same reference numbers.

As best seen in reference to FIGS. **1** and **2**, a threaded tie down **10** is provided having a head portion **20** and a shaft **30**. The head **20** has a width which is approximately twice its thickness. Further, the width of the head defines a generally arcuate exterior surface which is devoid of any sharp angles or other surface features. An aperture **22** is defined through the length of the head **20**, aperture **22** providing a location for a thread, rope, or other similar article to be attached to the tie down **10**. As further seen in reference to FIGS. **1** and **2**, the shaft **30** further defines helical threads **32** which extend from a position adjacent a tapered point **34** to where shaft **30** meets with head **20**. As seen in reference to FIG. **2**, the helical threads **32** are positioned approximately 18/32 of an inch from the adjacent winding as indicated by reference line "A". Further, threads **32** define smooth, exterior edge wall surfaces which increase the strength and durability of the helical threads **32**.

As seen in reference to FIG. **2**, the helical threads **32** have a thickness "C" which is about 0.5 inch. The helical threads have a pitch of about 9 windings per foot and are wound at an approximate 45° angle relative to an axis of shaft **30**. As also seen in reference to FIG. **2**, the thickness "C" of the helical windings, in combination with the distance "A" between the adjacent helices, are such that a significant portion of at least about 50% of the shaft **30** is not covered with the helical threads **32**. The combination of the relative thickness between the diameter of shaft **30**, the outer diameter of threads **32**, the smooth edge wall surfaces, and the at least about 50% of the gap distance "A" represents a useful balance of dimensions that facilitates the insertion of the threaded tie down into a variety of substrates while giving the threaded tie down the flexibility to bend under heavy loads without permanent deformation or damage to the helical tie down.

The shaft **30**, as seen by reference line "B" in FIG. **2** has a diameter of approximately ½" while the outer diameter of the shaft **30** including the helical threads **32** has a thickness of approximately 1⅛" as seen by reference line "D". The outer diameter of helical threads **32** gradually increases such that the outer diameter "D" when measured below the head **20** is approximately 1/32" of an inch greater than the diameter when measured near the tip. The slight taper of the threads facilitates the insertion and provides for an enhanced anchoring force of the tie down **10** when inserted into a soil substrate.

As seen in reference to FIG. **3**, a sheath **40** is provided which may function as both a storage tube and a handle. In FIG. **3**, the shaft **30** may be inserted into the hollow sheath **40**, a portion of sheath **40** extending past the tip **34** positioned over the threaded portion of the tie down **10**.

The sheath **40** may be provided by a length of hollow PVC pipe. Preferably, the inner diameter of the PVC pipe is slightly greater than the outer diameter of the shaft **30** and helical threads **32** such that when the tie down **10** is inserted into the length of sheath **40**, a tight friction fit is provided which keeps the respective components in place until withdrawn by the user.

As seen in reference to FIG. **4**, when the sheath **40** is removed from the shaft **30**, the sheath **40** may be inserted through aperture **22** so as to provide a handle useful for the insertion and removal of the tie down **10** relative to a soil substrate. As seen in reference to FIG. **5**, the sheath **40** allows for greater leverage to be applied for insertion (and removal) of the tie down **10** into the soil.

The tie down **10** may be used in a variety of soil types and fulfill a number of different functions. The tie down **10** is preferably made of a high impact polycarbonate which may be used to injection mold the tie down **10**. Suitable polycarbonates include high flow polycarbonates available from DuPont. Other resins which are believed useful include high impact acrylonitrile butadiene styrene (ABS) resins and high density polyethylene resins.

In one embodiment of tie down **10** formed from a high impact polycarbonate, the overall length of the tie down is approximately 13" having a threaded outer diameter of approximately 1⅛". The embodiment described above exhibits a tensile strength of over 22,000 lbs. In addition, a 4,000 lb. force may be applied at a 30° angle without breaking the helical tie down. When subjected to strong forces, the helical tie down may bend in response to the forces. However, upon removal of the force, subsequent warming of the tie down to a temperature of about 100° F. will restore the tie down **10** to its original shape.

The tie down **10** is able to function in a wide variety of substrates. The tie down **10** can easily be inserted into a sandy beach where it can be used to tether a beach umbrella, shade canopies, or other articles which require a tether to prevent being blown in the wind. The tie down **10** is also useful as a tool for anchoring tents and other camping equipment. Many commercial campgrounds place tent pads on a gravel bed. The tie down **10** is able to be inserted into the gravel substrate without bending or breaking, unlike conventional metal pins, metal stakes, and/or plastic pegs.

The sheath **40** provides a protective sheath which allows the safe transport and handling of the tie down **10** while also providing a useful handle for the insertion and removal of the tie down. The sheath **40** supplies sufficient torque that installation and removal of the tie down can be accomplished without resorting to hammering or side-to-side "rocking" of the tie down in order to remove it.

The arcuate, rounded shaped head **20** provides for a smooth attachment point which does not fray or abrade ropes or other materials used to fasten an object to the tie down **10**. The large, rounded shape head is also less likely to cause injury if stepped upon.

The arcuate shape of head **20** has additional advantages when tie down **10** is used as a tether for an animal. The smooth exterior shape of head **20** prevents the cord, chain, or other tether from binding or being wrapped around the head **20**. As a result, the movement of the animal is not unduly restricted by having the tether bound or wrapped around a tie down. The shape of the head **20** allows use of the tie down **10** as a tether without the necessity of a swivel which is often required in other prior art designs to prevent entanglement between the tether and the tie down **10**.

As is readily appreciated by one having ordinary skill in the art, the size and dimensions of the illustrated embodiment can be varied for various needs. For instance, smaller diameter and smaller height tie downs may be used for recreational tent camping. Larger tie downs, such as the described embodiment, are useful as a tether in sandy soils, having sufficient height and width to tightly adhere to the loose soil.

Tie downs **10** may be used as a bank or beach cleat to attach or stabilize a boat. Further uses include use as landscaping tethers for positioning new trees and shrubs. The tie down **10** may also be used as temporary markers for fence and post layouts, measurement of property lines, construction wall layouts, and establishing plant bed boundaries. Since the tie downs **10** are not driven by a hammer, the use of tie downs significantly reduces the hazard of puncturing a below ground cable or pipe.

Tie downs **10** may also be used as a convenient way of staking out a volley ball or badminton net as well as providing visible markers for various construction purposes, such as marking utility lines, boundary lines, and other semi-permanent marking systems.

Although preferred embodiments of the invention have been described using specific terms, devices, and methods, such description is for illustrative purposes only. The words used are words of description rather than of limitation. It is to be understood that changes and variations may be made by those of ordinary skill in the art without departing from the spirit or the scope of the present invention which is set forth in the following claims. In addition, it should be understood that aspects of the various embodiments may be interchanged, both in whole, or in part. Therefore, the spirit and scope of the appended claims should not be limited to the description of the preferred versions contained therein.

What is claimed is:

**1**. A tie down comprising:

a shaft;

a plurality of threads operatively disposed on an exterior of said shaft;

a head, said head defining an arcuate exterior surface, said head further defining a bore therethrough extending through a width of the head; and,

a sleeve positionable between a first position as a sheath engaging an exterior of the shaft and a second position wherein said sleeve is inserted through said bore.

**2**. The tie down according to claim **1** wherein said tie down is injection molded from a material selected from the group consisting of high flow polycarbonates, high impact, acrylonitrile butadiene styrene and high density polyethylene.

**3**. The tie down according to claim **1** wherein said plurality of threads have a pitch of approximately 1 winding per about 1.25 inches.

**4**. The tie down according to claim **1** wherein said threads are wound about said shaft at an angle of approximately 45°.

**5**. A tie down comprising:

a shaft;

a plurality of threads having a wind angle relative to said shaft of about 45° and operatively disposed on an exterior of said shaft, said threads having a thickness of about 0.5 inches and providing an outer diameter of said threads and said shaft of substantially about 1.2 inches;

a head defining an arcuate exterior surface, said head further defining a bore therethrough extending through a width of the head; and,

a sleeve positionable between a first position as a sheath engaging an exterior of the shaft and a second position wherein said sleeve is inserted through said bore.

* * * * *